MALE END VIEW	FEMALE END VIEW (J1)	WIRING DIAGRAM

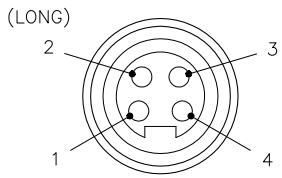

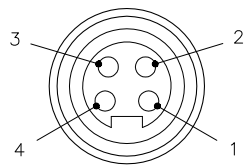

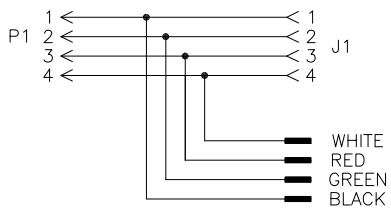

SPECIFICATIONS

CONTACT CARRIER MATERIAL/COLOR	PVC/BLACK
MOLDED MATERIAL/COLOR	PVC/BLACK
CONTACT MATERIAL/PLATING	BRASS or COPPER/GOLD
COUPLING NUT MATERIAL/PLATING	BRASS/NICKEL
RATED CURRENT [A]	25 A COMBINED, 20 A DROP
RATED VOLTAGE [V]	600 V
CABLE JACKET MATERIAL/COLOR	TPE/BLACK
CONDUCTOR INSULATION MATERIAL	PVC
NUMBERS OF CONDUCTORS [AWG]	4x12 AWG
TEMPERATURE RATING	−40°C to +90°C (−40°F to +194°F)
PROTECTION CLASS	MEETS NEMA 1,3,4,6P AND IEC IP67, IP68, IP69K

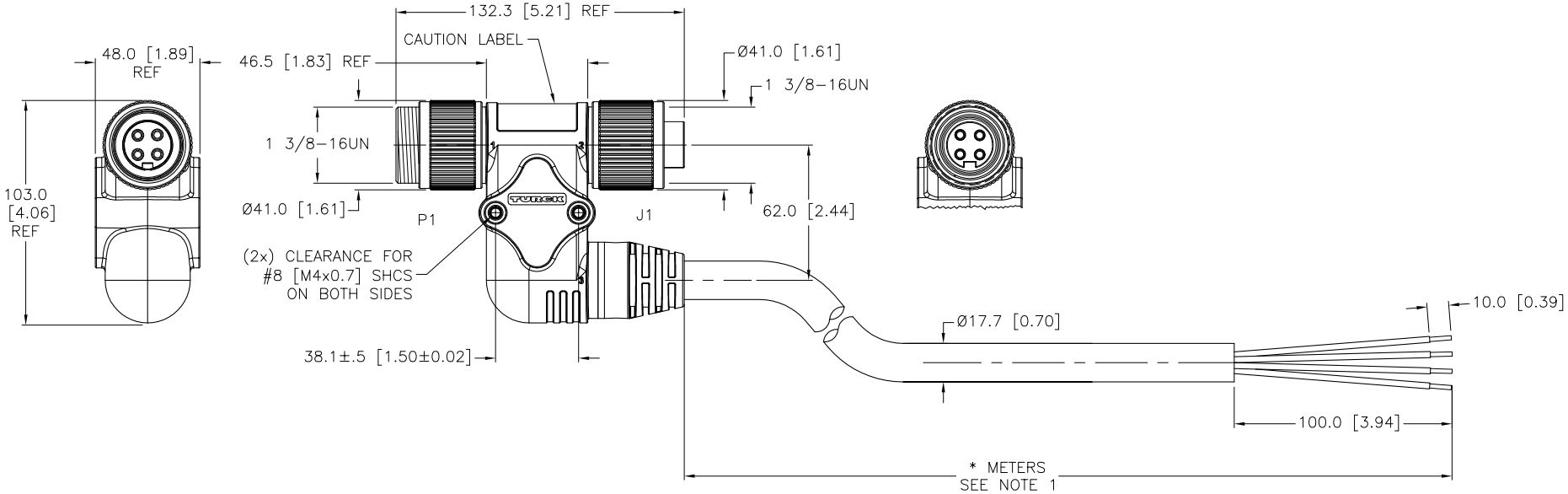

CABLE LENGTH	TOLERANCE
ALL LENGTHS	+ 4% (OR 50mm) OF LENGTH − 0% (OR 0mm) OF LENGTH WHICHEVER IS GREATER
STRIP LENGTH	**TOLERANCE**
0−7mm	±0.5mm
8−29mm	±1.0mm
30−49mm	±2.0mm
50−69mm	±3.0mm
70−100mm	±4.0mm
OVER 100mm	±5.0mm

NOTES:

1. "*" INDICATES CABLE LENGTH IN METERS. CONTACT TURCK TO ORDER SPECIFIC LENGTHS.

2. STRIP AND TIN LENGTHS ARE FOR REFERENCE ONLY; SOME LENGTHS MAY NOT BE STRIPPED AND TINNED.

CAUTION:
RISK OF ELECTRICAL SHOCK
DO NOT DISCONNECT UNDER LOAD

SOURCE DRAWING - FOR REFERENCE ONLY

REV	DESCRIPTION	BY	DATE	ECO NO.
B	UPDATE CABLE JACKET MATERIAL	CBM	10/19/11	36867

RELATED DOCUMENTS
1.
2.
3.
4.

3RD ANGLE PROJECTION

THIS DRAWING IS CONFIDENTIAL AND THE PROPERTY OF TURCK INC. USE OF THIS DOCUMENT WITHOUT WRITTEN PERMISSION IS PROHIBITED.

TURCK INC
High Technology Sensors and Automation Controls
3000 CAMPUS DRIVE
MINNEAPOLIS, MN 55441
1−800−544−7769
(763) 553−7300
(763) 553−0708 fax
turck.com

MATERIAL: SEE SPECIFICATIONS

FINISH: SEE SPECIFICATIONS

ALL DIMENSIONS DISPLAYED ON THIS DRAWING ARE FOR REFERENCE ONLY

CONTACT TURCK FOR MORE INFORMATION

DRFT: RWC | DATE: 08/19/10
DSGN: | SCALE: 1=3.0

UNIT OF MEASUREMENT
MILLIMETER [INCH]
DO NOT SCALE THIS DRAWING

DESCRIPTION: SH−GSDM/GKDM/T42−*

IDENTIFICATION NO.:

REV: B

FILE: 777024426 | SHEET 1 OF 1

Approved 10/19/2011, work order #21481 by C.M.